Monsters of Yacht® - Mark Scott circuitmanagement@gmail.com 615-812-8696

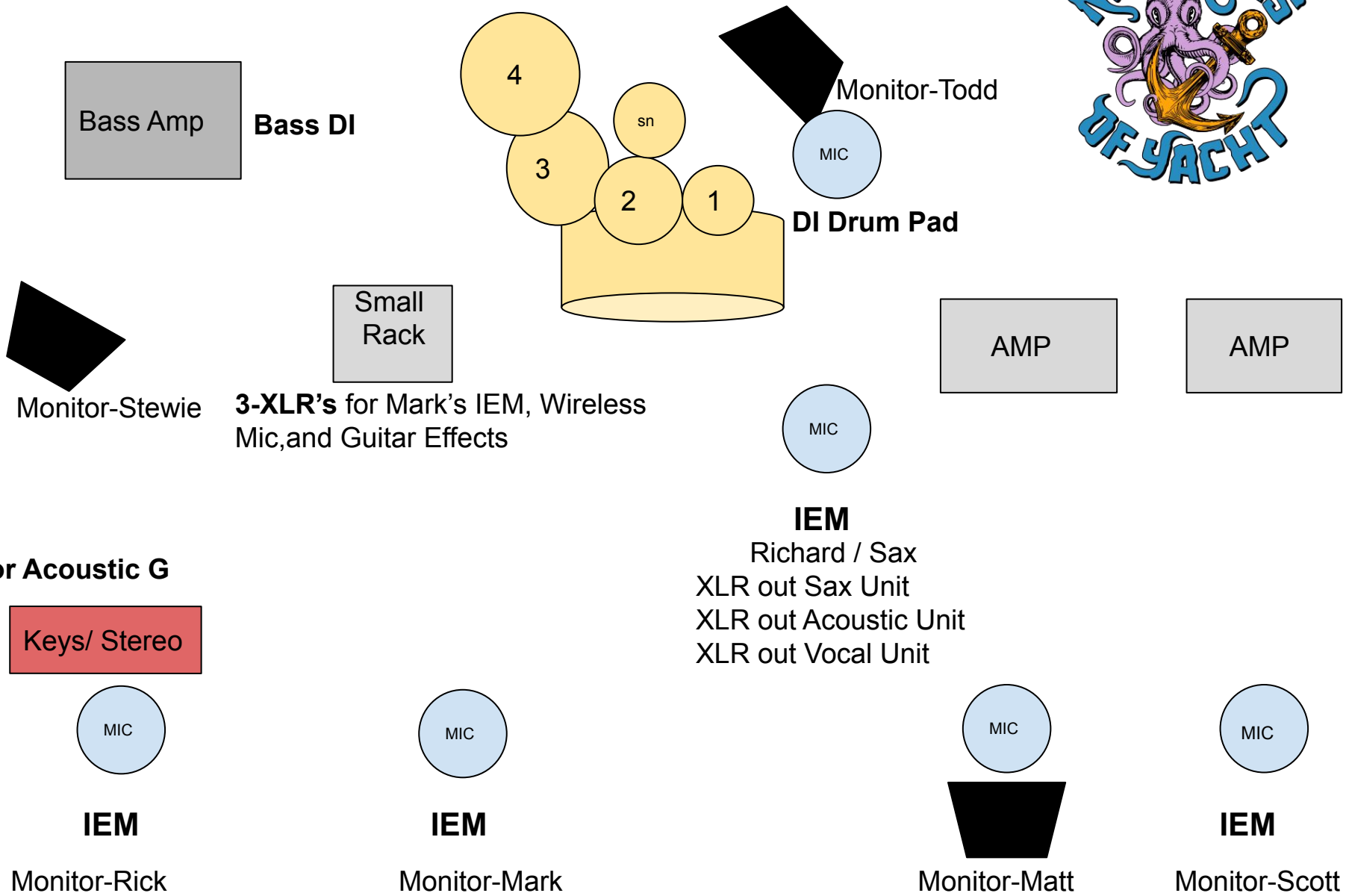

All vocal mic stands are BOOM stands. AC power needed at all positions